MICROELETTRICA

DATA SHEET

RW_5 | 120 - 280 W
Wire Resistor

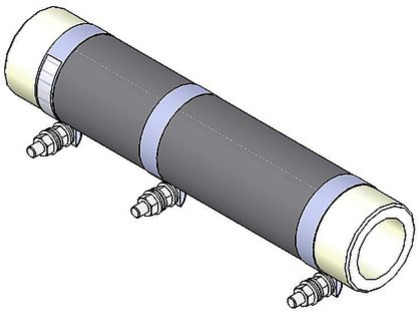

Article-No.		ds4000 0150		
Type		RW 3	RW 4	RW 5
Pulse Power (W) T_a ~ 40 °C *referred to a cycle duration of 120s Approximate value (depending on resistance)	ED 6 %*	1140	1900	2660
	ED 15 %*	590	980	1370
	ED 25 %*	380	640	900
	ED 40 %*	260	440	620
	ED 60 %*	180	300	420
Nominal continuous power (W) T_a ~ 40 °C		120	200	280
Rated continuous current (A) T_a ~ 40 °C		0.3 - 25	0.3 - 25	0.3 - 25
Resistance Values at 20°C (Ohm)		0.18 - 1390	0.32 - 2380	0.46 - 3380
Tolerance of resistance at 20°C		±10%		
Degree of protection (EN 60529) (in the accordingly screwed on state)		IP 00		
Max. permissible operating voltage		600 V AC / 800 V DC		
Cooling		natural convection		
Electrical terminal		M4 / M5		
Operation temperature range		-25 ... +40 °C		
Testing voltage		2.7 kV AC 1s		
Mounting positions				

Subject to technical modifications

HEINE Resistors GmbH · Otto-Mohr-Straße 5 · 01237 Dresden · Germany · Tel: +49 (0) 351 3192-0 · E-Mail: info@heine-resistors.com
Gerichtsstand Dresden · HRB 3315 · USt-IdNr: DE 181022992 · St.-Nr 203/110/04604
IBAN: DE64 8508 0000 04022658 00 · BIC: DRESDEFF850
Geschäftsführer: Patrick Rudolph
Ein Unternehmen der Knorr-Bremse AG

DATA SHEET

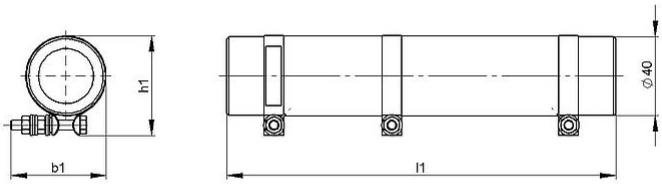

Article-No.		ds4000 0150		
Type		RW 3	RW 4	RW 5
Length [mm]	l1	198	298	398
Width [mm]	b1	54	54	54
Height [mm]	h1	65	65	65
Weight approx. [kg]		0.6	0.9	1.2
Last update		2016-01-13		

Mounting instruction:
The resistor should be protected by appropriate safety measures against overloading.
Do not mount the resistor with any obstruction in the air inlet or air outlet area.

Tube resistors have to mount in a horizontal position.
The resistor has to be grounded.

HEINE Resistors GmbH · Otto-Mohr-Straße 5 · 01237 Dresden · Germany · Tel: +49 (0) 351 3192-0 · E-Mail: info@heine-resistors.com
Gerichtsstand Dresden · HRB 3315 · USt-IdNr: DE 181022992 · St.-Nr 203/110/04604
IBAN: DE64 8508 0000 04022658 00 · BIC: DRESDEFF850
Geschäftsführer: Patrick Rudolph
Ein Unternehmen der Knorr-Bremse AG