DATA SHEET

STG 1x0 | 4.3 - 17.2 kW
Steel Grid Resistor
cRUus 600 V

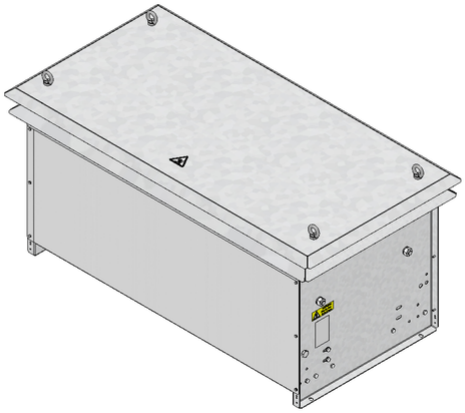

Article-No.		ds1000 2101			
Type		STG 110	STG 120	STG 130	STG 140
Pulse Power (kW) T_a ~ 40 °C *referred to a cycle duration of 120s Approximate value (depending on resistance)	ED 6 %*	34	67.9	101.9	135.9
	ED 15 %*	18.1	36.1	54.2	72.2
	ED 25 %*	12.9	25.8	38.7	51.6
	ED 40 %*	9.5	18.9	28.4	37.8
Nominal continuous power (kW) T_a ~ 40 °C		4.3	8.6	12.9	17.2
Resistance Values at 20°C (Ohm)		0.1 - 55	0.1 - 32	0.2 - 27	0.3 - 20.5
Tolerance of resistance at 20°C		±10 %			
Degree of protection (EN 60529) (in the accordingly screwed on state)		IP 23			
Max. permissible operating voltage		UL 600 V			
Cooling		natural convection			
Housing temperature at nominal continuous power T_a ~ 40 °C		≤250 °C			
Electrical terminal		bolt clamp M6, M8, M10, M12 / PE M6, M8, M10			
Operation temperature range		-25 ... +40 °C			
Testing voltage		2.7 kV AC 1 s			
Approvals/marking		CE; UL; CSA			
Mounting positions					

Subject to technical modifications

HEINE Resistors GmbH · Otto-Mohr-Straße 5 · 01237 Dresden · Germany · Tel: +49 (0) 351 3192-0 · E-Mail: info@heine-resistors.com
Gerichtsstand Dresden · HRB 3315 · USt-IdNr: DE 181022992 · St.-Nr 203/110/04604
IBAN: DE64 8508 0000 04022658 00 · BIC: DRESDEFF850
Geschäftsführer: Patrick Rudolph
Ein Unternehmen der Knorr-Bremse AG

DATA SHEET

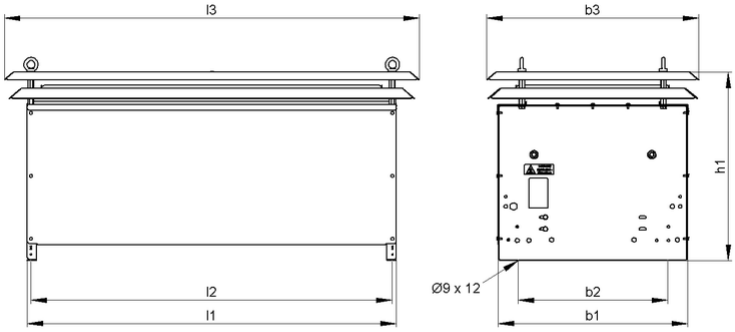

Article-No.		ds1000 2101			
Type		STG 110	STG 120	STG 130	STG 140
Length [mm]	l1	330	530	740	940
	l2	310	510	720	920
	l3	≤450	≤650	≤860	≤1060
Width [mm]	b1	≤485	≤485	≤485	≤485
	b2	380	380	380	380
	b3	≤545	≤545	≤545	≤545
Height [mm]	h1	≤485	≤485	≤485	≤485
Weight approx. [kg]		20	27	36	46
Last update		2016-01-26			

Mounting instruction:
The resistor should be protected by appropriate safety measures against overloading.
Do not mount the resistor with any obstruction in the air inlet or air outlet area.
The resistor has to be grounded.

HEINE Resistors GmbH · Otto-Mohr-Straße 5 · 01237 Dresden · Germany · Tel: +49 (0) 351 3192-0 · E-Mail: info@heine-resistors.com
Gerichtsstand Dresden · HRB 3315 · USt-IdNr: DE 181022992 · St.-Nr 203/110/04604
IBAN: DE64 8508 0000 04022658 00 · BIC: DRESDEFF850
Geschäftsführer: Patrick Rudolph
Ein Unternehmen der Knorr-Bremse AG