MICROELETTRICA

DATA SHEET

RFC_18 | 14.0 - 18.0 kW
Wire Resistor
with Terminalbox C

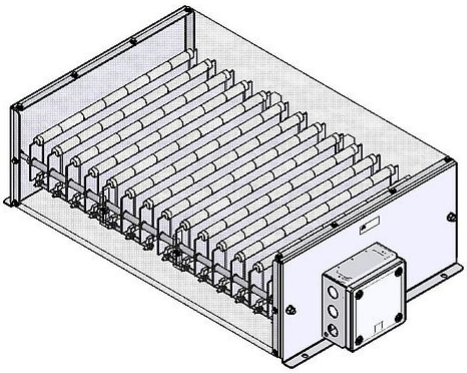

Article-No.		ds2003 1182		
Type		RFC 14-7	RFC 16-7	RFC 18-7
Pulse Power (kW) T_a ~ 40 °C *referred to a cycle duration of 120s Approximate value (depending on resistance)	ED 6 %*	112	128	144
	ED 15 %*	63	72	81
	ED 25 %*	42	48	54
	ED 40 %*	29.4	33.6	37.8
Nominal continuous power (kW) T_a ~ 40 °C		14	16	18
Resistance Values at 20°C (Ohm)		3.5 - 26	4 - 23	4.5 - 20
Tolerance of resistance at 20°C		±10 %		
Degree of protection (EN 60529) (in the accordingly screwed on state)		IP 20		
Max. permissible operating voltage		EN 600 V AC / 800 V DC		
Cooling		natural convection		
Housing temperature at nominal continuous power T_a ~ 40 °C		ca. 200 °C		
Electrical terminal		line up terminal 10 - 35 mm²		
Operation temperature range		-25 ... +40 °C		
Testing voltage		2.7 kV AC 1 s		
Mounting positions				

Subject to technical modifications

HEINE Resistors GmbH · Otto-Mohr-Straße 5 · 01237 Dresden · Germany · Tel: +49 (0) 351 3192-0 · E-Mail: info@heine-resistors.com
Gerichtsstand Dresden · HRB 3315 · USt-IdNr: DE 181022992 · St.-Nr 203/110/04604
IBAN: DE64 8508 0000 04022658 00 · BIC: DRESDEFF850
Geschäftsführer: Patrick Rudolph
Ein Unternehmen der Knorr-Bremse AG

DATA SHEET

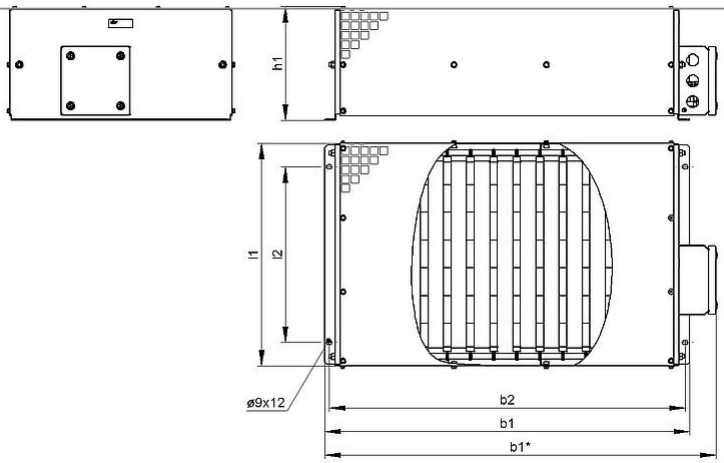

Article-No.		ds2003 1182		
Type		RFC 14-7	RFC 16-7	RFC 18-7
Length [mm]	l1	<490	<490	<490
	l2	380	380	380
Width [mm]	b1	<795	<895	<995
	b2	770	870	970
	b3	<850	<950	<1050
Height [mm]	h1	<250	<250	<250
Weight approx. [kg]		27	30	33
Last update		2015-10-29		

Mounting instruction:
The resistor should be protected by appropriate safety measures against overloading.
Do not mount the resistor with any obstruction in the air inlet or air outlet area.

The resistor has to be grounded.

HEINE Resistors GmbH · Otto-Mohr-Straße 5 · 01237 Dresden · Germany · Tel: +49 (0) 351 3192-0 · E-Mail: info@heine-resistors.com
Gerichtsstand Dresden · HRB 3315 · USt-IdNr: DE 181022992 · St.-Nr 203/110/04604
IBAN: DE64 8508 0000 04022658 00 · BIC: DRESDEFF850
Geschäftsführer: Patrick Rudolph
Ein Unternehmen der Knorr-Bremse AG